Magnum® PRO Curve™ Semiautomatic Guns

Processes
MIG, Pulsed MIG, Flux-Cored

Product Number
K2950-x Magnum® PRO Curve™ 200
K2951-x Magnum® PRO Curve™ 300
K2952-x Magnum® PRO Curve™ 400
K3055-x Magnum® PRO Curve™ 400 Short Neck

Amperage Rating @ 60% Duty Cycle
Magnum® PRO Curve™ 200: CO_2: 200A
Magnum® PRO Curve™ 300: CO_2: 300A
Magnum® PRO Curve™ 400: CO_2: 400A

Wire Diameter Range in. (mm)
.025 - 3/64 (0.6 - 1.2)
.025 - 5/64 (0.6 - 2.0)
.025 - 5/64 (0.6 - 2.0)

Cable Length ft. (m)
See Table Below

Semiautomatic Air-Cooled Guns

New Magnum® PRO Curve™ guns for MIG or flux-cored welding combine our classic curved handle with our Copper Plus™ contact tips and Magnum® PRO gun expendables to deliver long hours of fabrication welding with less frequent tip and gun expendable parts changes.

Shown K2951-2

FEATURES

- **Industrial Grade Construction -**
  - High quality copper parts ensure superior electrical contact and heat dissipation.
  - Four trigger leads are standard for fast field repair.
  - Patent-pending Anti-Seize™ tip and diffuser thread design reduces tip and diffuser seizing.
- **Lincoln Electric Copper Plus™ Contact Tips** - Larger tip diameter and mass improve heat dissipation to increase tip life.
- **Curve™ Handle Design** - Our Curve™ handle is lightweight and balanced, providing a comfortable grip to reduce fatigue.
- **Rotating Gun Tube and Gun Hanger Clip** - Allow any number of hand positions to reduce fatigue or fit into tight spaces.
- **Simplified Expendable Parts Selection** - 350A and 550A consumables are interchangeable across all gun models.
  - All models ship with 350A parts.
- **Upgrade your Magnum®** - Turn your existing gun into a Magnum® PRO Curve™ by switching to Magnum® PRO gun tubes and expendable parts.

WHAT'S INCLUDED

- Contact Tip (Qty. 1) (KP2744-045)
- 0.625 in. (15.9 mm) Thread-On Gas Nozzle with 1/8 in. (3.2 mm) recess (KP2742-1-62R)
- Thread-On Diffuser (KP2746-1)

APPLICATIONS

- **Shop Production**
- **Maintenance and Repair**
- **Construction**

THE LINCOLN ELECTRIC COMPANY
22801 St. Clair Avenue • Cleveland, OH • 44117-1199 • U.S.A
PH: 216-481-8100 • www.lincolnelectric.com

Publication E12.05 | Issue Date 02/22
© Lincoln Global, Inc. All Rights Reserved.

TOP FEATURES

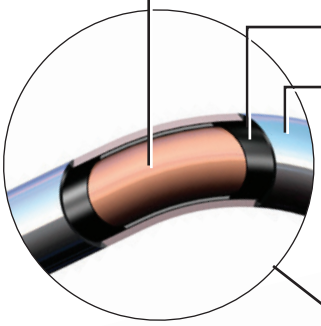

- **Gun Tube**
  - Copper - High quality copper inner tube enhances electrical conductivity.
  - Teflon® - Tough insulation and safety barrier.
  - Chrome Plated Copper - Resists spatter sticking and reflects radiant heat.
  - Rotating Gun Tube and Hanger Clip help you get into tight spaces.

- **Gun Handle**
  - Repositionable for top or bottom trigger operation.
  - Patent-pending Magnum Grip Design - Unique grip design provides balance, reduces operator fatigue and offers a sure, confident grip.
  - Natural Grip Trigger position feels right from the first minute of the day to the end of the shift.

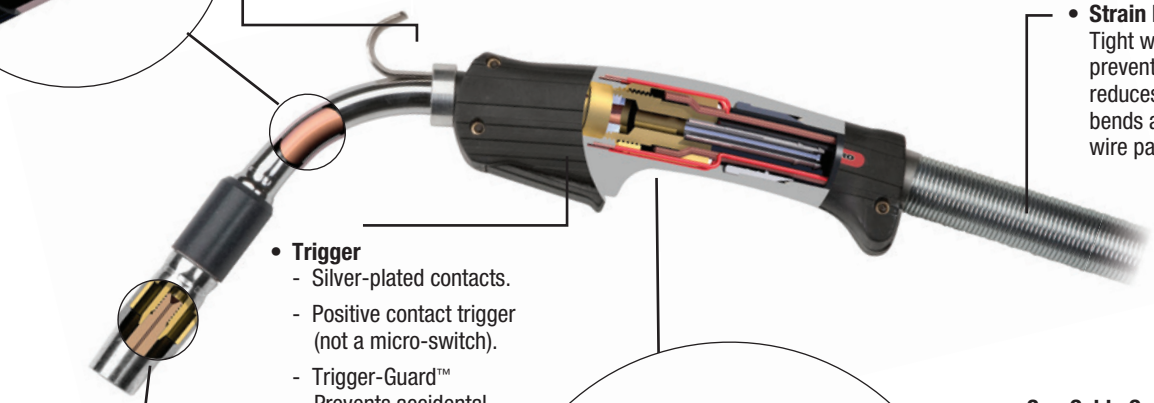

- **Strain Relief**
  Tight winding prevents snagging, reduces acute cable bends and protects wire path.

- **Trigger**
  - Silver-plated contacts.
  - Positive contact trigger (not a micro-switch).
  - Trigger-Guard™ Prevents accidental triggering.
  - Locking trigger kit available.

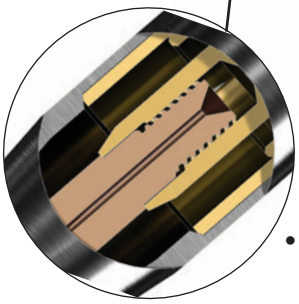

- **Contact Tip Technology**
  - Copper Plus™ More copper for better heat dissipation.
  - Anti-Seize™ thread design on contact tips and diffuser.

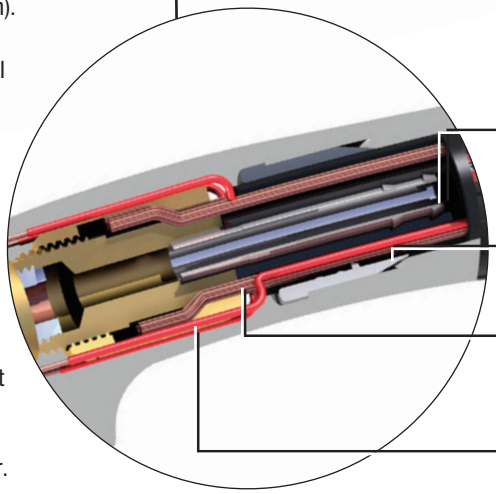

- **Gun Cable Connection System**
  - Inner barbed connection securely fastens gun cable core tube to prevent gas leaks.
  - Re-usable barbed outer locking collar securely clamps the gun cable jacket.
  - Large electrical contact surface area between gun cable and gun body ensures long life.
  - Extra trigger leads allow fast, easy servicing.

CONTACT TIP TECHNOLOGY

Copper Plus™ Contact Tips
Compare Magnum® PRO tips to Standard Magnum® and Tregaskiss®

Larger Diameter Means More Copper.
The Result? Greater Heat Dissipation and Longer Life.

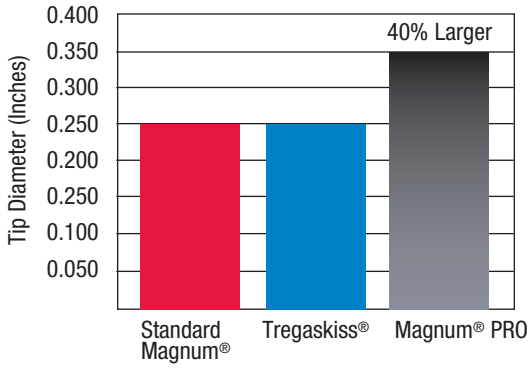

Contact Tip for 250/350

Contact Tip for 450/550

Tregaskiss is a trademark of Tregaskiss, wholly owned subsidiary of Illinois Tool Works.

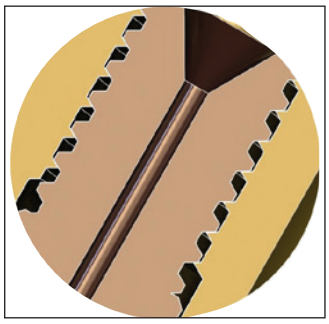

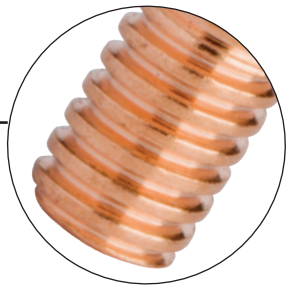

Patent-pending Anti-Seize™ Thread Design

Flattened thread profile increases the thread cross-section where heat typically concentrates and tips fail. The result is reduced melting, fusion, seizing and extended contact tip service life. Longer life and fewer tip changes reduces expendable part and labor costs while increasing arc time. To extend contact tip life even more, optional chrome-zirconium Extended Life™ tips are also available.

CONTACT TIP TECHNOLOGY

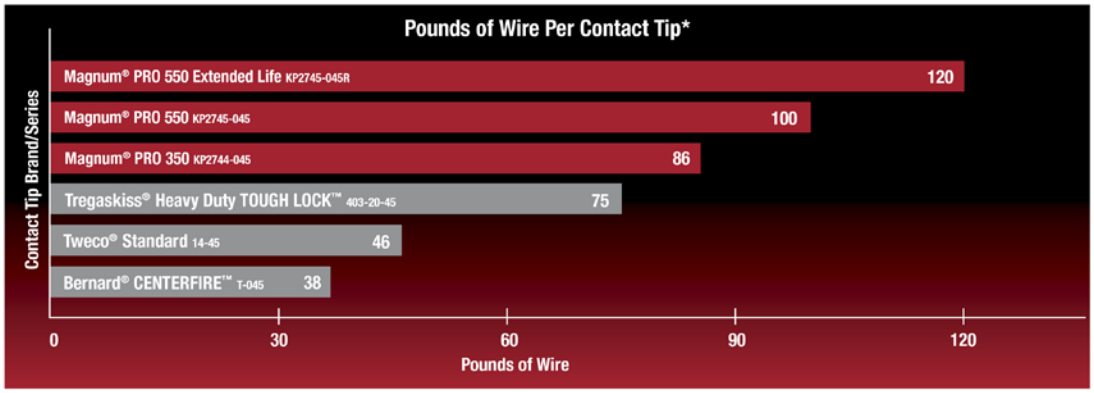

* Results based on the following test parameters:.045 SuperArc® L-56 on 60 lb. spools. Two spools of wire per tip. Pulse program. 350 ipm Wire Feed Speed (approx. 16 welding hours per tip). 100% duty cycle. Contact tip usage values based on replacing tip after 10% wear. Your actual results may vary.

The trademark Tregaskiss® and Tough Lock™ are the property of Tregaskiss, wholly owned subsidiary of Illinois Tool Works Inc. Bernard® and Centerfire™ are trademarks of Illinois Tool Works Inc. The trademark Tweco® is the property of Thermadyne Industries Inc. Actual testing was completed by Lincoln Electric personnel in Cleveland, Ohio in December 2009. Testing results were complete and accurate at the time of publication in September 2010.

EXPENDABLE PARTS

STEP 1 SELECT YOUR GUN CONNECTOR KIT

GUN CONNECTOR KIT		
Manufacturer	**Wire Feeder Model**	**Magnum® PRO 200/300/400**
Lincoln Electric®	LN-7 Series, LN-8, LN-9, LN-25 [Up to .052 in. (1.4 mm) Wire]	K466-1
	LN-8, LN-9 Series, LN-25 [1/16 in. (1.6 mm) and Larger Wire]	K466-8
	LF-72, LF-74 Series, LN-25 PRO	K466-10
	Power Feed™ 10 and 25 series	K466-10
	POWER MIG® Series and Power Wave® C300	K466-6
Tweco® Adapted	**No. 2, No. 3, No. 4 Guns (K466), No. 5 (K613)**	K466-2
Miller®	**Intellimatic, Sidekick, D-51A, Porto-Mig Millermatic 130, 200, MM-35, S-42GL, S-52A, S-54A, Swing Arc-Dual, Swing Arc-Single S-32S, 52D, 54D, 54E, 60 Series**	K466-3

K466-10

STEP 2 SELECT YOUR LINER

MAGNUM® PRO CURVE™ 200A in. (mm)				
ft. (m)	**.025-.030 (0.6-0.8)**	**.030-.035 (0.8-0.9)**	**.035-.045 (0.9-1.2)**	**Aluminum(1) .035-3/64 (0.9-1.2)**
15 (4.5)	KP42-25-15	KP42-3035-15	KP42-4045-15	KP44N-3545-15(1)

(1) Recommended for aluminum wire welding.

MAGNUM® PRO CURVE™ 300A/400A in. (mm)				
ft. (m)	**.035-.045 (0.9-1.2)**	**.052-1/16 (1.3-1.6)**	**1/16-5/64 (1.6-2.0)**	**Aluminum(1) .035-3/64 (0.9-1.2)**
15 (4.5)	KP44-3545-15	KP44-116-15	KP44-564-15	KP44N-3545-15(1)
26 (7.6)	KP44-3545-25	KP44-116-25	KP44-564-25	–

350 A and 550 A Magnum® PRO Expendable Parts are interchangeable. Interchanging will require gun tube insulator and gas diffuser changes. Customers may choose to change expendable parts to standardize stocking parts or to make the gun more compact for tight spaces.

Magnum® PRO 350A Expendables

Contact Tip for up to 350A

CONTACT TIPS 350A				
Wire Diameter in. (mm)	Standard	Standard	Tapered Tip	Tapered Tip
	Pkg. Qty. - 10	Pkg. Qty. - 100	Pkg. Qty. - 10	Pkg. Qty. - 100
0.025 (0.6)	KP2744-025	KP2744-025-B100	KP2744-025T	KP2744-025T-B100
0.030 (0.8)	KP2744-030	KP2744-030-B100	KP2744-030T	KP2744-030T-B100
0.035 (0.9)	KP2744-035	KP2744-035-B100	KP2744-035T	KP2744-035T-B100
0.040 (1.0)	KP2744-040	KP2744-040-B100	KP2744-040T	KP2744-040T-B100
0.045 (1.2)	KP2744-045	KP2744-045-B100	KP2744-045T	KP2744-045T-B100
0.052 (1.3)	KP2744-052	KP2744-052-B100	KP2744-052T	KP2744-052T-B100
1/16 (1.6)	KP2744-116	KP2744-116-B100	KP2744-116T	KP2744-116T-B100
5/64 (2.0)	KP2744-564	KP2744-564-B100	KP2744-564T	KP2744-564T-B100

GAS DIFFUSER 350A				
Pkg. Qty.	Thread-on Standard Duty	Thread-on Light Duty	Thread-on Extended Reach	Slip-on
1	KP2746-1	KP3141-1[1]	KP3360-1	KP2746-2
25	KP2746-1-B25	KP3141-1-B25[1]	KP3360-1-B25	KP2746-2-B25

Gas Diffuser for 350A Thread-on

Gas Diffuser for 350A Slip-on

Extended Reach Gas Diffuser for 350A Thread-on

GUN TUBE INSULATOR 350A	
Pkg. Qty.	Part Number
1	KP2773-2
25	KP2773-2-B25

Gun Tube Insulator 350A

GAS NOZZLE 350 A								
			Gas Nozzle Diameter in. (mm)					
	Nozzle	Pkg. Qty.	Standard 0.375 (9.5)	Standard 0.5 (12.7)	Extended Reach 0.5 (12.7)	Narrow Gap 0.5 (12.7)	Bottleneck 0.5 (12.7)	Standard 0.625 (15.9)
Thread-on	1/8 (3.2) Recess	1	KP2742-1-38R	KP2742-1-50R	KP3359-1-50R	KP3617-1-50R	KP3160-1-50R	KP2742-1-62R
		25	KP2742-1-38R-B25	KP2742-1-50R-B25	KP3359-1-50R-B25	KP3617-1-50R-B25	KP3160-1-50R-B25	KP2742-1-62R-B25
	Flush	1	KP2742-1-38F	KP2742-1-50F	KP3359-1-50F	KP3617-1-50F	KP3160-1-50F	KP2742-1-62F
		25	KP2742-1-38F-B25	KP2742-1-50F-B25	KP3359-1-50F-B25	KP3617-1-50F-B25	KP3160-1-50F-B25	KP2742-1-62F-B25
	1/8 (3.2) Stickout	1	KP2742-1-38S	KP2742-1-50S	KP3359-1-50S	KP3617-1-50S	KP3160-1-50S	KP2742-1-62S
		25	KP2742-1-38S-B25	KP2742-1-50S-B25	KP3359-1-50S-B25	KP3617-1-50S-B25	KP3160-1-50S-B25	KP2742-1-62S-B25
Slip-on	1/8 (3.2) Recess	1	–	KP2742-2-50R	–	–	–	KP2742-2-62R
		25	–	KP2742-2-50R-B25	–	–	–	KP2742-2-62R-B25
	Flush	1	–	KP2742-2-50F	–	–	–	KP2742-2-62F
		25	–	KP2742-2-50F-B25	–	–	–	KP2742-2-62F-B25
	1/8 (3.2) Stickout	1	–	KP2742-2-50S	–	–	–	KP2742-2-62S
		25	–	KP2742-2-50S-B25	–	–	–	KP2742-2-62S-B25

Bottleneck Gas Nozzle for up to 350A Thread-on 1/8" (3.2 mm) Recessed

Gas Nozzle for up to 350A Thread-on 1/8" (3.2 mm) Recessed

Extended Reach Gas Nozzle for up to 350A Thread-on 1/8" (3.2 mm) Recessed

GUN TUBE[2]				
Gun Tubes	45º	60º	82º	Flexible
Magnum® PRO Curve™ 200	KP2924-45	KP2924-60	—	—
Magnum® PRO Curve™ 300	KP2925-45	KP2925-60	—	—
Magnum® PRO Curve™ 400	KP2926-45	KP2926-60 / KP2926-60L[3][4]	KP2926-82	KP3200-1

(1) For use with Magnum® PRO 100L KP3075-1-XXX nozzles only
(2) Can be used on existing Magnum® Guns
(3) Extended version.
(4) When using an extended gun tube and extended gas nozzle, a 25 ft. liner should be used.

350 A and 550 A Magnum® PRO Expendable Parts are interchangeable. Interchanging will require gun tube insulator and gas diffuser changes. Customers may choose to change expendable parts to standardize stocking parts or to make the gun more compact for tight spaces.

Magnum® PRO 550A Expendables

Contact Tip for up to 550A

CONTACT TIPS 550 A				
Wire Diameter in. (mm)	Standard	Standard	Extended Life	Extended Life
	Pkg. Qty. - 10	Pkg. Qty. - 100	Pkg. Qty. - 10	Pkg. Qty. - 100
0.035 (0.9)	KP2745-035	KP2745-035-B100	KP2745-035R	KP2745-035R-B100
0.040 (1.0)	KP2745-040	KP2745-040-B100	NA	NA
0.045 (1.2)	KP2745-045	KP2745-045-B100	KP2745-045R	KP2745-045R-B100
0.052 (1.3)	KP2745-052	KP2745-052-B100	KP2745-052R	KP2745-052R-B100
1/16 (1.6)	KP2745-116	KP2745-116-B100	KP2745-116R	KP2745-116R-B100
0.068-0.072 (1.7-1.8)	KP2745-072	KP2745-072-B100	KP2745-072R	KP2745-072R-B100
5/64 (2.0)	KP2745-564	KP2745-564-B100	KP2745-564R	KP2745-564R-B100
3/32 (2.4)(1)	KP2745-332	KP2745-332-B100	KP2745-332R	KP2745-332R-B100
7/64 (2.8)(1)	KP2745-764	KP2745-764-B100	KP2745-764R	KP2745-764R-B100
1/8 (3.2)(1)	KP2745-18	KP2745-18-B100	NA	NA

(1) 550 only

GAS DIFFUSER 550A					
		Type			
Material	Pkg. Qty.	Thread-on Standard Duty	Thread-on 1/4 in. Recess	Thread-on, Extended Reach	Slip-on
Brass	1	KP2747-1	KP3155-1	KP4781-1	KP5129-2
	25	KP2747-1-B25	KP3155-1-B25	KP4781-1-B25	KP5129-2-B25
Copper	1	KP4766-1	-	-	KP4766-2
	25	KP4766-1-B25	-	-	KP4766-2-B25

* 550A Extended Reach Diffusers are compatible with KP3359-1-50X Nozzles and KP2745-XX 550A Contact Tips

Gas Diffuser for 550A Thread-on

Gas Diffuser for 550A Slip-on

GUN TUBE INSULATOR 550A	
Pkg. Qty.	Part Number
1	KP2773-1
25	KP2773-1-B25

Gun Tube Insulator 550A

GAS NOZZLE 550A					
			Gas Nozzle Diameter in. (mm)		
	Nozzle	Pkg. Qty.	Standard 0.5 (12.7)	Standard 0.625 (15.9)	Bottleneck 0.625 (15.9)	Standard 0.750 (19)
Thread-on	1/8 (3.2) Recess	1	KP2743-1-50R	KP2743-1-62R	KP3161-1-62R	KP2743-1-75R
		25	KP2743-1-50R-B25	KP2743-1-62R-B25	KP3161-1-62R-B25	KP2743-1-75R-B25
	Flush	1	KP2743-1-50F	KP2743-1-62F	KP3161-1-62F	KP2743-1-75F
		25	–	KP2743-1-62F-B25	KP3161-1-62F-B25	KP2743-1-75F-B25
	1/8 (3.2) Stickout	1	KP2743-1-50S	KP2743-1-62S	KP3161-1-62S	KP2743-1-75S
		25	–	KP2743-1-62S-B25	KP3161-1-62S-B25	KP2743-1-75S-B25
Slip-on	1/8 (3.2) Recess	1	KP5130-2-50R	KP5130-2-62R	–	KP5130-2-75R
		25	KP5130-2-50R-B25	KP5130-2-62R-B25	–	KP5130-2-75R-B25
	Flush	1	KP5130-2-50F	KP5130-2-62F	–	KP5130-2-75F
		25	KP5130-2-50F-B25	KP5130-2-62F-B25	–	KP5130-2-75F-B25
	1/8 (3.2) Stickout	1	KP5130-2-50S	KP5130-2-62S	–	KP5130-2-75S
		25	KP5130-2-50S-B25	KP5130-2-62S-B25	–	KP5130-2-75S-B25

Bottleneck Gas Nozzle for 550A Thread-on 1/8 in. (3.2 mm) Recessed

Gas Nozzle for 550A Thread-on 1/8 in. (3.2 mm) Recessed

RECOMMENDED ACCESSORIES

GENERAL OPTIONS

Magnum® PRO Harness Adapter
Required for use with Magnum® PRO Dual Procedure or Dual Schedule guns when adapting to POWER MIG® products, Power Wave® C300, or Miller Electric® wire feeders.
Order K3159-1

SPECIFICATIONS

Product Name	Product Number	Amperage Rating 60% Duty Cycle CO_2	Amperage Rating 60% Duty Cycle Mixed	Wire Diameter Range in.	Wire Diameter Range (mm)	Cable Length ft. (m)	Gun Connector	Gun Liner
Magnum® PRO Curve™ 200	K2950-1	200	150	.025 - 3/64	(0.6 - 1.2)	10 (3.0)	Order Separately	Order Separately
	K2950-2					15 (4.5)		
Magnum® PRO Curve™ 300	K2951-1	300	200	.025 - 5/64	(0.6 - 2.0)	10 (3.0)		
	K2951-2					15 (4.5)		
	K2951-3					20 (6.1)		
	K2951-4					25 (7.6)		
Magnum® PRO Curve™ 300 Dual Procedure (Switch Control)	K3130-1	300	200	.025 - 5/64	(0.6 - 2.0)	10 (3.0)		
	K3130-2					15 (4.5)		
	K3130-3					20 (6.1)		
	K3130-4					25 (7.6)		
Magnum® PRO Curve™ 300 Dual Schedule (Trigger Control)	K3092-1	300	200	.025 - 5/64	(0.6 - 2.0)	10 (3.0)		
	K3092-2					15 (4.5)		
	K3092-3					20 (6.1)		
	K3092-4					25 (7.6)		
Magnum® PRO Curve™ 400	K2952-1	400	400 @ 50% DC	.025 - 5/64	(0.6 - 2.0)	10 (3.0)		
	K2952-2					15 (4.5)		
	K2952-3					20 (6.1)		
	K2952-4					25 (7.6)		
Magnum® PRO Curve™ 400 Dual Procedure (Switch Control)	K3098-1	400	400 @ 50% DC	.025 - 5/64	(0.6 - 2.0)	10 (3.0)		
	K3098-2					15 (4.5)		
	K3098-3					20 (6.1)		
	K3098-4					25 (7.6)		
Magnum® PRO Curve™ 400 Dual Schedule (Trigger Control)	K3093-1	400	400 @ 50% DC	.025 - 5/64	(0.6 - 2.0)	10 (3.0)		
	K3093-2					15 (4.5)		
	K3093-3					20 (6.1)		
	K3093-4					25 (7.6)		
Magnum® PRO Curve™ 400A Short Neck	K3055-1	400	400 @ 50% DC	.025 - 5/64	(0.6 - 2.0)	10 (3.0)		
	K3055-2					15 (4.5)		
	K3055-3					20 (6.1)		
	K3055-4					25 (7.6)		
Magnum® PRO Curve™ 200 Ready-Pak®	K2950-2-10-45	200	150	.025 - 3/64	(0.6 - 1.2)	15 (4.5)	K466-10	KP42-4045-15
	K2950-2-FM-45						Fast-Mate	KP42-4045-15
Magnum® PRO Curve™ 300 Ready-Pak®	K2951-2-6-45	300	200	.025 - 5/64	(0.6 - 2.0)	15 (4.5)	K466-6	KP44-3545-15
	K2951-2-10-45						K466-10	KP44-3545-15
	K2951-2-10-116						K466-10	KP44-116-15
	K2951-2-3-45						K466-3	KP44-3545-15
	K2951-2-FM-45						Fast-Mate	KP44-3545-15
Magnum® PRO Curve™ 400 Ready-Pak®	K2952-2-10-45	400	400 @ 50% DC	.025 - 5/64	(0.6 - 2.0)	15 (4.5)	K466-10	KP44-3545-15
	K2952-2-10-45-550(1)						K466-10	KP44-3545-15
	K2952-2-3-45						K466-3	KP44-3545-15
	K2952-2-3-45-550(1)						K466-3	KP44-3545-15
	K2952-2-6-45						K466-6	KP44-3545-15
	K2952-2-FM-45						Fast-Mate	KP44-3545-15
	K2952-2-1-116-550(1)						K466-1	KP44-116-15
	K2952-2-1-564-550(1)						K466-1	KP44-564-15
	K2952-3-10-45-550(1)					20 (6.1)	K466-10	KP44-3545-25
	K2952-3-3-45						K466-3	KP44-3545-25
	K2952-3-3-45-550(1)						K466-3	KP44-3545-25
	K2952-3-6-45						K466-6	KP44-3545-25
Magnum® PRO Curve™ 400A Short Neck Ready-Pak®	K3055-2-10-45	400	400 @ 50% DC	.025 - 5/64	(0.6 - 2.0)	15 (4.5)	K466-10	KP44-3545-15
	K3055-2-6-45						K466-6	KP44-3545-15
	K3055-3-6-45					20 (6.1)	K466-6	KP44-3545-25

** (1) Comes standard with 550A Magnum PRO Expendables.*

CUSTOMER ASSISTANCE POLICY

The business of The Lincoln Electric Company is manufacturing and selling high quality welding equipment, consumables, and cutting equipment. Our challenge is to meet the needs of our customers and to exceed their expectations. On occasion, purchasers may ask Lincoln Electric for information or advice about their use of our products. Our employees respond to inquiries to the best of their ability based on information provided to them by the customers and the knowledge they may have concerning the application. Our employees, however, are not in a position to verify the information provided or to evaluate the engineering requirements for the particular weldment. Accordingly, Lincoln Electric does not warrant or guarantee or assume any liability with respect to such information or advice. Moreover, the provision of such information or advice does not create, expand, or alter any warranty on our products. Any express or implied warranty that might arise from the information or advice, including any implied warranty of merchantability or any warranty of fitness for any customers' particular purpose is specifically disclaimed.

Lincoln Electric is a responsive manufacturer, but the selection and use of specific products sold by Lincoln Electric is solely within the control of, and remains the sole responsibility of the customer. Many variables beyond the control of Lincoln Electric affect the results obtained in applying these types of fabrication methods and service requirements.

Subject to Change – This information is accurate to the best of our knowledge at the time of printing. Please refer to www.lincolnelectric.com for any updated information.

LINCOLN® ELECTRIC